NILES®

INSTALLATION GUIDE

FOR PLACING A/V DEVICES EXTENDED DISTANCES FROM THEIR A/V SOURCE

CAT-5 S-VIDEO STEREO AUDIO WALL MOUNT BALUN

C5-SVA2WM

CONGRATULATIONS!

Thank you for choosing the **C5-SVA2WM S-Video Stereo Audio Balun** from Niles. With proper installation and operation, you'll enjoy years of trouble free use.

Niles manufacturers the industry's most complete line of custom installation components and accessories for audio/video systems. To see the complete assortment, visit our website at www.nilesaudio.com.

INTRODUCTION

The C5-SVA2WM is a stand-alone device that transforms on S-Video channel and a pair of audio channels to and from CAT-5 twisted pair cabling. It has two sets of simple connections. The first is one S-Video a pair of RCA connectors for the S-Video and line level audio signals. The second is a shielded CAT-5 connector for the CAT-5 twisted pair connection. The circuitry is passive so there is no need for a power supply.

The C5-SVA2WM allows an S-Video and line-level audio device such as a VCR or Satellite Receiver to be located an extended distance from the system it is to be connected to. Doing so with conventional audio video cabling is both expensive and prone to signal degradation. By using a pair of these devices and a run of CAT-5 the problem can be solved inexpensively and without signal loss and the introduction of noise. Additionally, in today's retrofit market an installer cannot always successfully run a wire from point A to point B. There exists however an abundance of twisted pair cabling in many homes. By using a pair of these devices with an existing wire an installer may be able to complete a job that he otherwise could not.

FEATURES

- *Shielded CAT-5 Connector*
- *Gold Plated Color Coded RCA Connectors*
- *S-Video DIN Connector*
- *Ten-year limited warranty*
- *1-Gang Decora Style*
- *Decora wall plate included*

SPECIFICATIONS

- *Overall dimensions: 1.75" (44.5 mm) W x 2.84" (7.2 mm) H x 1.99" (5 mm) D*
- *Cut out size: 1.87" (47.5 mm) W x 3.00" (76.2 mm) H x 2.50" (63.50 mm) D*
- *Bandwidth:*
  Y: DC to 6 MHz
  C: 1 MHz to 6 MHz
- *Transmission Distance:*
  S-Video: 500' (150 m) (CAT-5 UTP)

NILES®

BLENDING HIGH FIDELITY AND ARCHITECTURE®

Niles Audio Corporation
12331 S.W. 130 Street Miami, Florida 33186
305-238-4373

1-800-BUY-HIFI www.nilesaudio.com

©2007 Niles Audio Corporation. All rights reserved. Niles, the Niles logos and Blending High Fidelity and Architecture are registered trademarks of Niles Audio Corporation. All other trademarks are the property of their respective owners. DS00575A

NILES®

INSTALLATION

1. Turn off all power to equipment prior to installation.
2. Make all CAT-5 connections using the components shown in the diagram below.
3. Do not share any other signals on the CAT-5 cable other than the signals being extended by the CAT-5 baluns.
4. Terminate all cables as straight through T-568A terminations.
5. Using the appropriate interconnect cables connect both the source and the destination equipment to the CAT-5 baluns.
6. Once all connections have been made you may power on the equipment again.

C5-SVA2WM Balun Connection Diagram

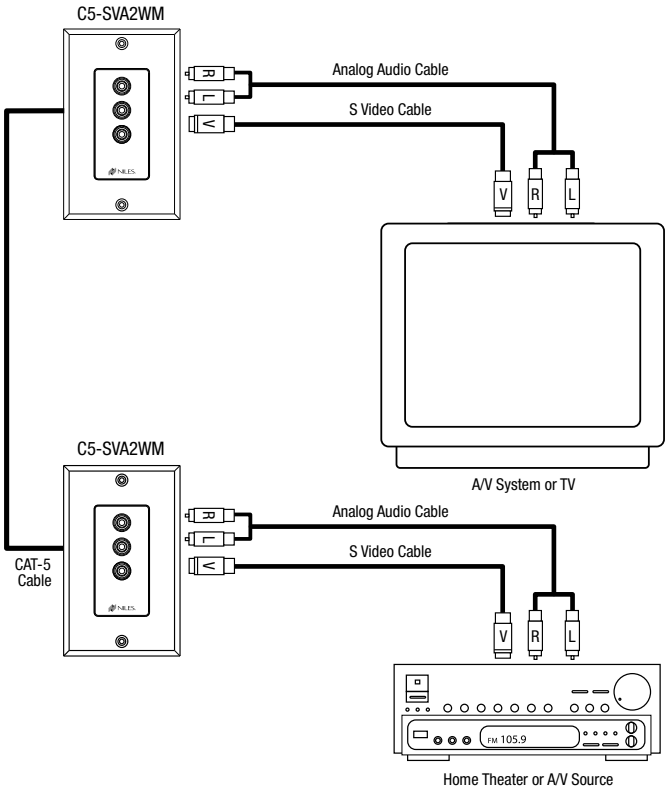

LIMITED WARRANTY

Niles Audio Corporation ("NILES") warrants its passive products (those not requiring AC or battery power) to the original purchaser to be free of manufacturing defects in material and workmanship for a period of ten years from the date of purchase.

This Warranty is subject to the following additional conditions and limitations. The Warranty is void and inapplicable if NILES deems that the product has been used or handled other than in accordance with the instructions provided by the manufacturer, including but not limited to damage caused by accident, mishandling, improper installation, abuse, negligence, or normal wear and tear, or any defect caused by repair to the product by anyone other than NILES or an authorized NILES dealer.

To obtain warranty service, take the unit to the nearest authorized NILES dealer, who will test the product and if necessary, forward it to NILES for service. If there are no authorized NILES dealers in your area, you must write to NILES and include your name, model and serial number of your unit, along with a brief description of the problem. A factory Return Authorization Number will be sent to you. DO NOT RETURN ANY UNIT WITHOUT FIRST RECEIVING WRITTEN AUTHORIZATION AND SHIPPING INSTRUCTIONS FROM NILES.

If the above conditions are met, the purchaser's sole remedy shall be to return the product to NILES, in which case NILES will repair or replace, at its sole option, the defective product without charge for parts or labor. NILES will return a unit repaired or replaced under warranty by shipping same by its usual shipping method from the factory (only) at its expense within the United States of America. THERE ARE NO OTHER WARRANTIES, INCLUDING WITHOUT LIMITATION, EITHER EXPRESS OR IMPLIED WARRANTIES OF MERCHANTABILITY OR FITNESS FOR A PARTICULAR PURPOSE, WITH RESPECT TO THE PRODUCT.

REPAIR OR REPLACEMENT AS PROVIDED UNDER THIS WARRANTY IS THE EXCLUSIVE REMEDY OF THE CONSUMER/PURCHASER. NILES SHALL NOT BE RESPONSIBLE FOR ANY INCIDENTAL OR CONSEQUENTIAL DAMAGES EXCEPT TO THE EXTENT PROVIDED (OR PROHIBITED) BY APPLICABLE LAW.

Some states do not allow the exclusion or limitation of incidental or consequential damages, so the above limitation may not apply to you. This warranty gives you specific legal rights, and you may also have other rights which vary from state to state.

For the name of your nearest authorized NILES dealer contact:
NILES AUDIO CORPORATION, P.O. BOX 160818, Miami, Florida 33116-0818.

Please fill in your product information and retain for your records.

Model **C5-SVA2WM** Serial No._____ Purchase Date_____

CAT-5 BALUNS AVAILABLE FROM NILES

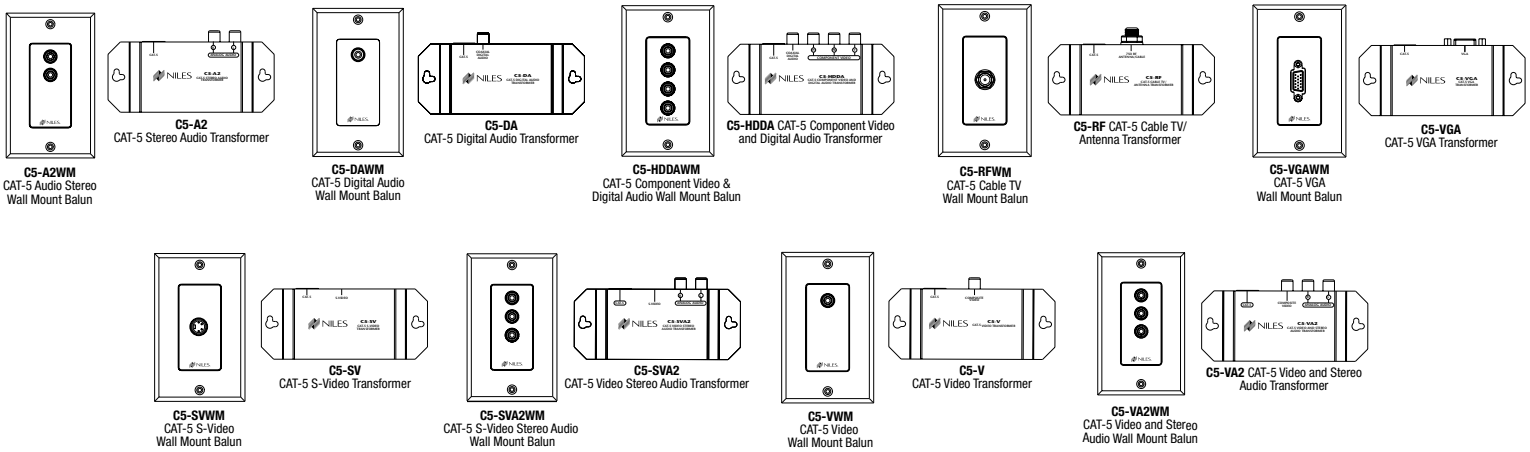

Visit www.nilesaudio.com for a complete catalog.